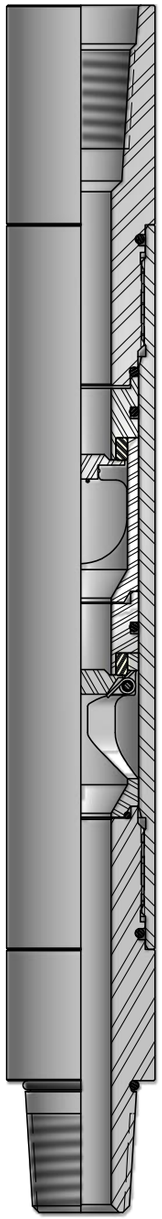

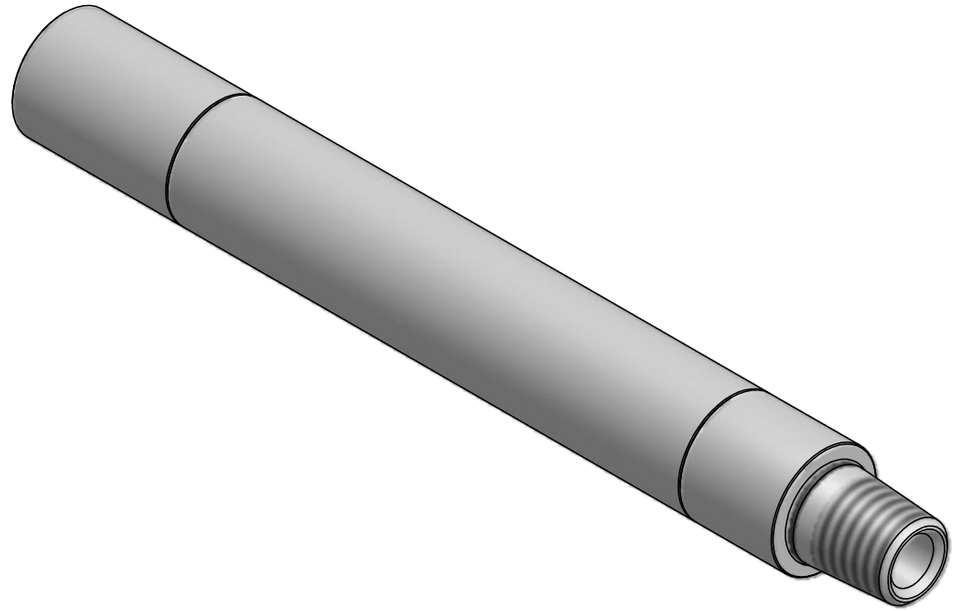

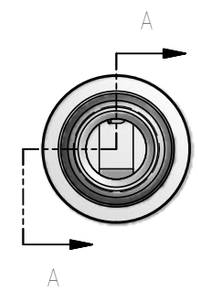

SECTION A–A

REV	DATE	DESCRIPTION	BY	APPR

TOLERANCES
.X = +/- 0.030
.XX = +/- 0.015
.XXX = +/- 0.005
∠ = +/- 0.5 DEG
◎ = .005 TIR

E. BRACE TOOL INC.
6407 20 Street
EDMONTON, ALBERTA
T6P 0A1
TEL (780) 438 - 0441 FAX (780) 438 - 0447

MATERIAL		TITLE
AS REQUIRED		1.68 DUAL FLAPPER VALVE
SCALE: NTS	SHEET: 1 of 1	
DWN: WJM	DATE: 4/26/2010	DWG #: 18-01-DF-168-A0
		REV: B